Halo Static Corner Workstation Assembly Instructions

Instruction Manual

Table of Contents

Component parts 2
Assembly Instructions 3

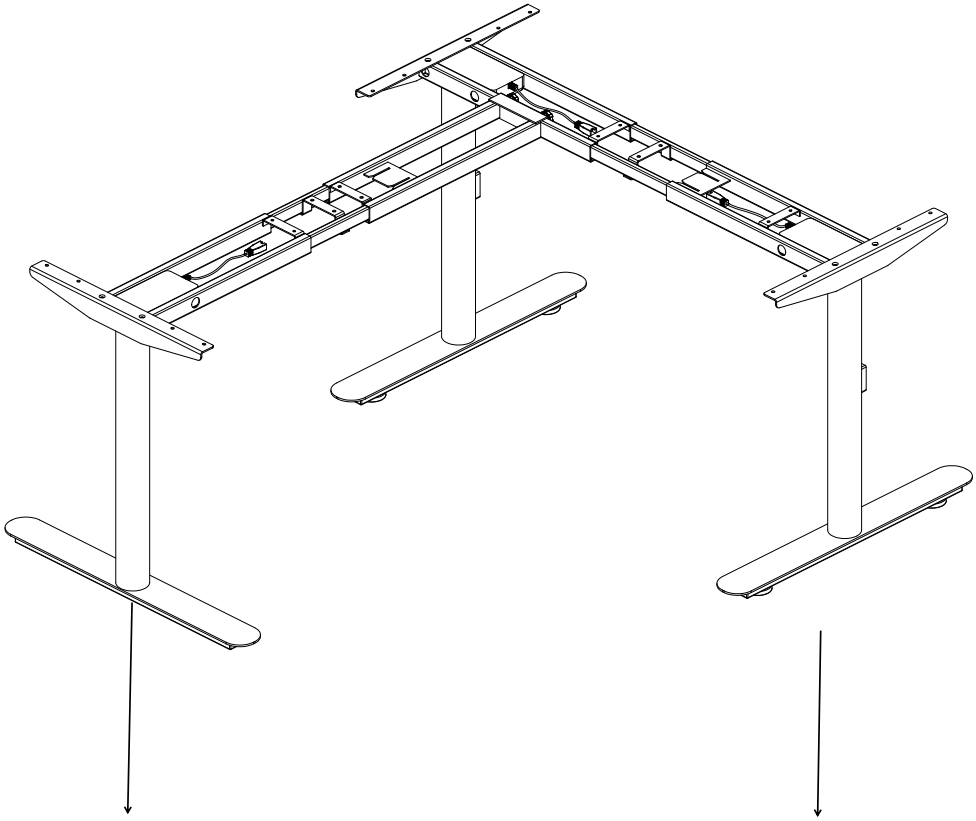

Halo Static Fixed Height Return Frame

Halo Static Single Sided Fixed Height Workstation Frame

Component parts

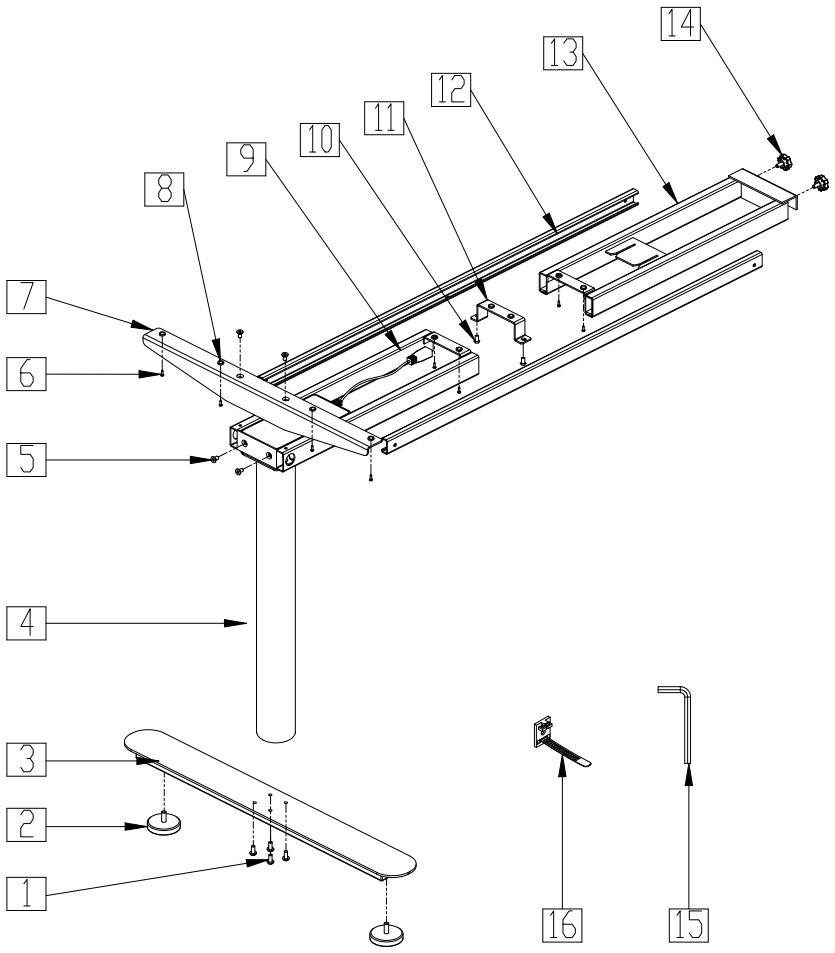

NO.	Component Name	PCS		NO.	Component Name	PCS
1	Bolt: M6x35	5		9	Top frame-1	1
2	Leveling pads	2		10	Bolt: M6x10	3
3	Table feet	1		11	Centre bracket	1
4	Column	1		12	Center rails	2
5	Bolt: M6x12	4		13	Top frame-2	1
6	Screw:ST4x20	13		14	Hand bolts M6x10	2
7	Side brackets	1		15	Allen Wrench(4mm)	1
8	Rubber pad	10		16	Cable tie	2

Assembly Instructions

Step 1

Loosen the pre-installed bolts and Adjust the length of the top frame to match the size of the table top.

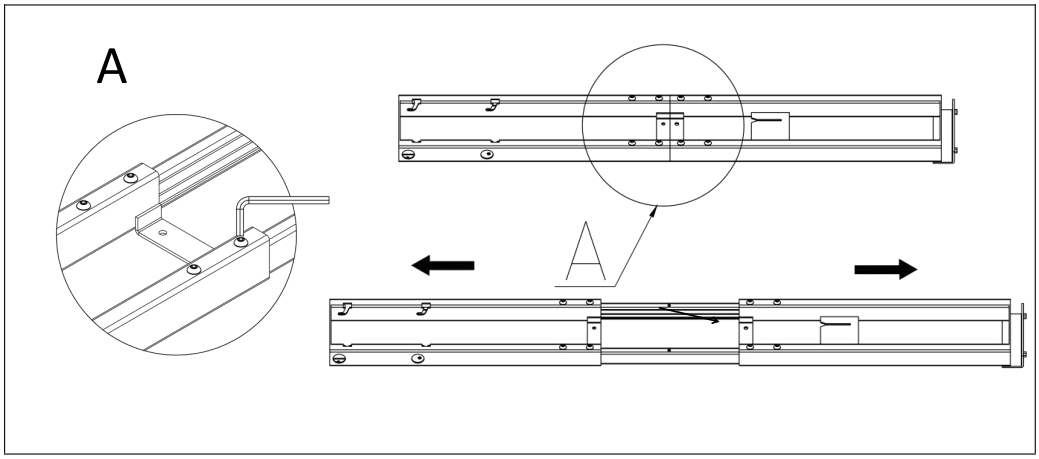

Step 2

Inset the column to the top frame.

- First fix 2pcs screws M6x12 like **B** displayed
- And then tighten the pre-installed bolts like **C** displayed

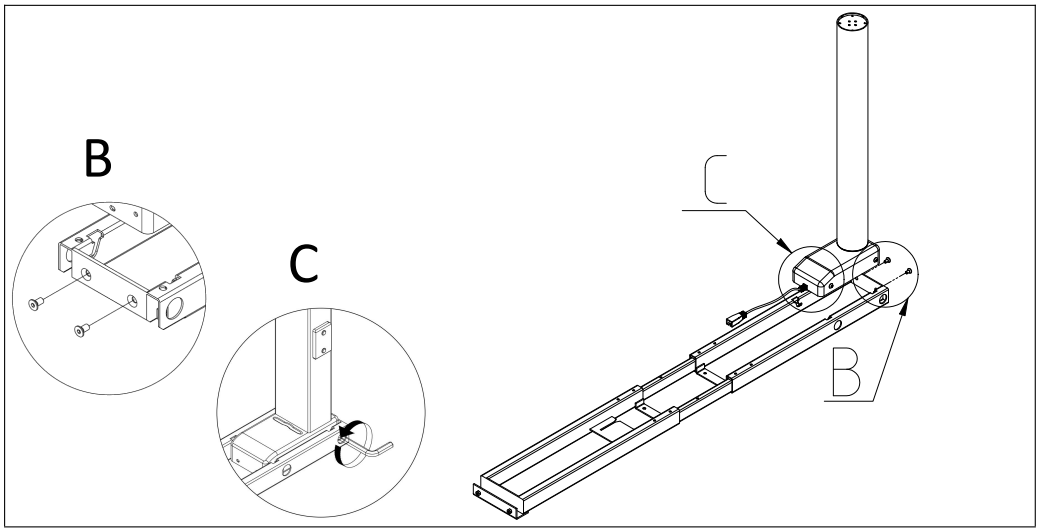

Step 3

Install the table feet Screws 4 pcs M6x35,install the 4 leveling pads.

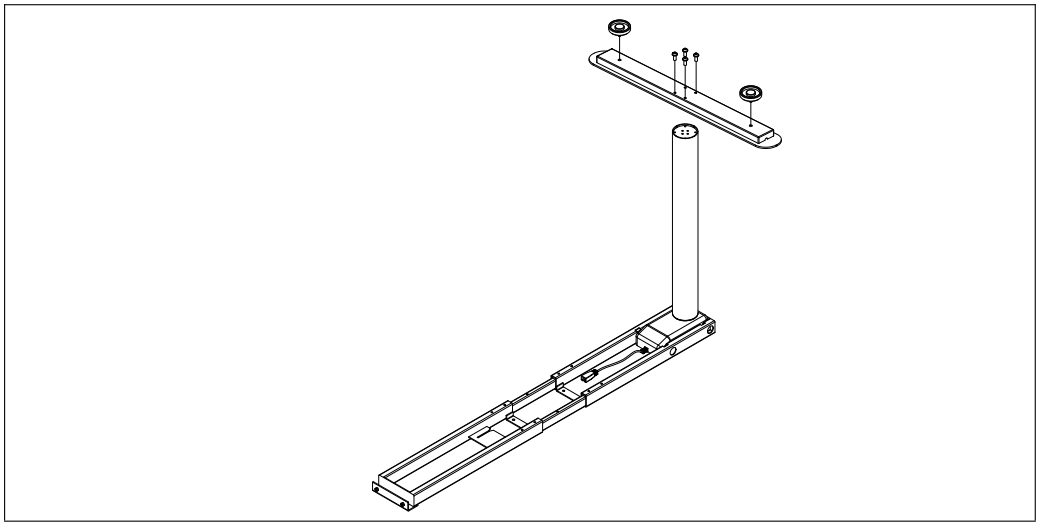

Step 4

Install the side bracket with Screws 2 pcs M6x12,

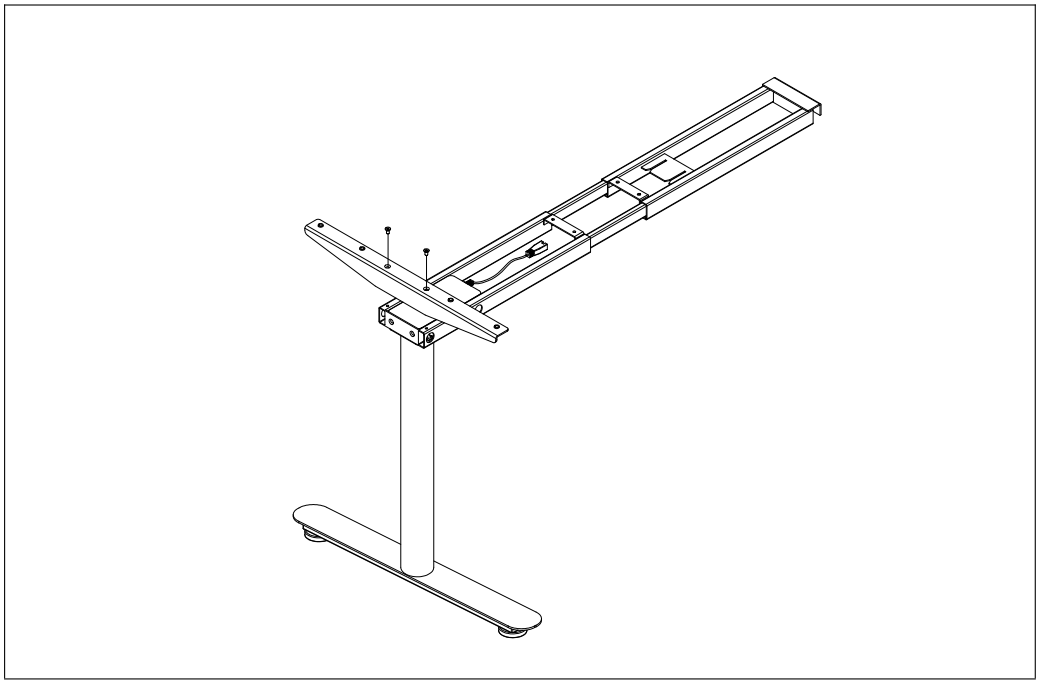

Binowee Group | Level 1, 100 George Street, Redfern NSW 2016 | 02 9188 5180 | sales@binoweegroup.com.au | binoweegroup.com.au

Follow each step in order. Two people are recommended for assembly and lifting. Contact Binowee Group for missing or damaged parts.

Step 5

Connect the return frame to the single workstation and fixed with 2 hand bolts.
Fix the centre brackets with 2pcs screws M6x10.

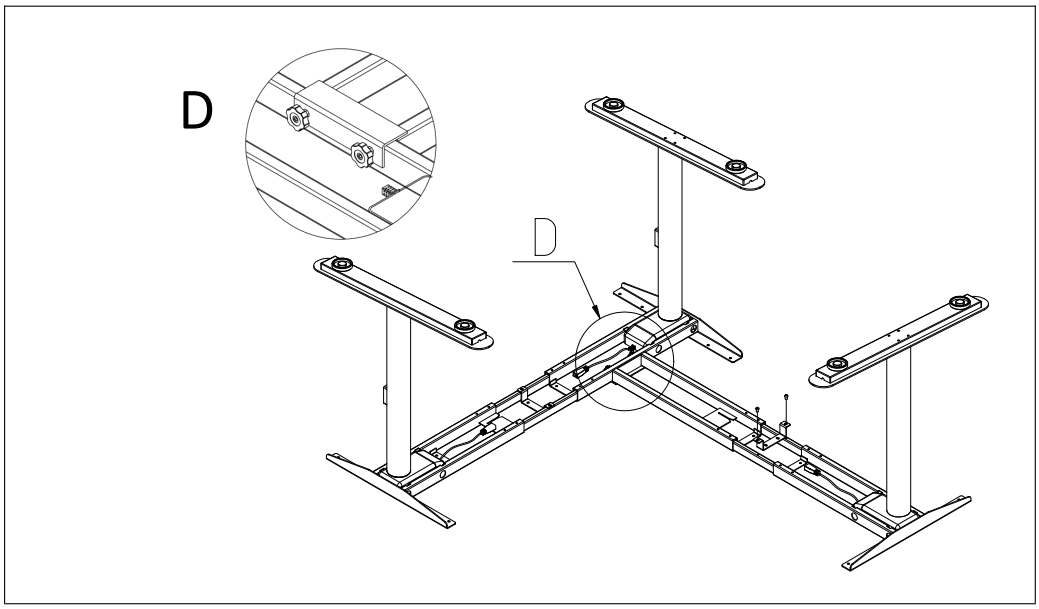

Step 6

Mount the tabletop and fix it with 24 pcs screws ST4x20
Tighten the bolts on top frame to fix it.

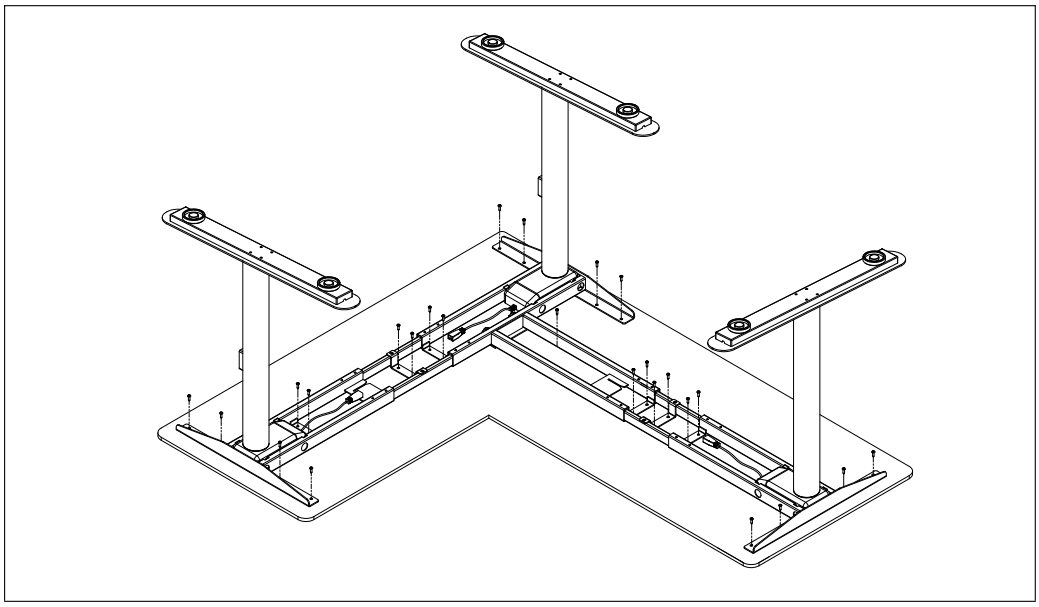

Cable tray installation

Step 1
- Fix the cable tray(B2-SSCT) to the cable tray arms(HP-SSARM) with 8 pcs M6x10 screws.

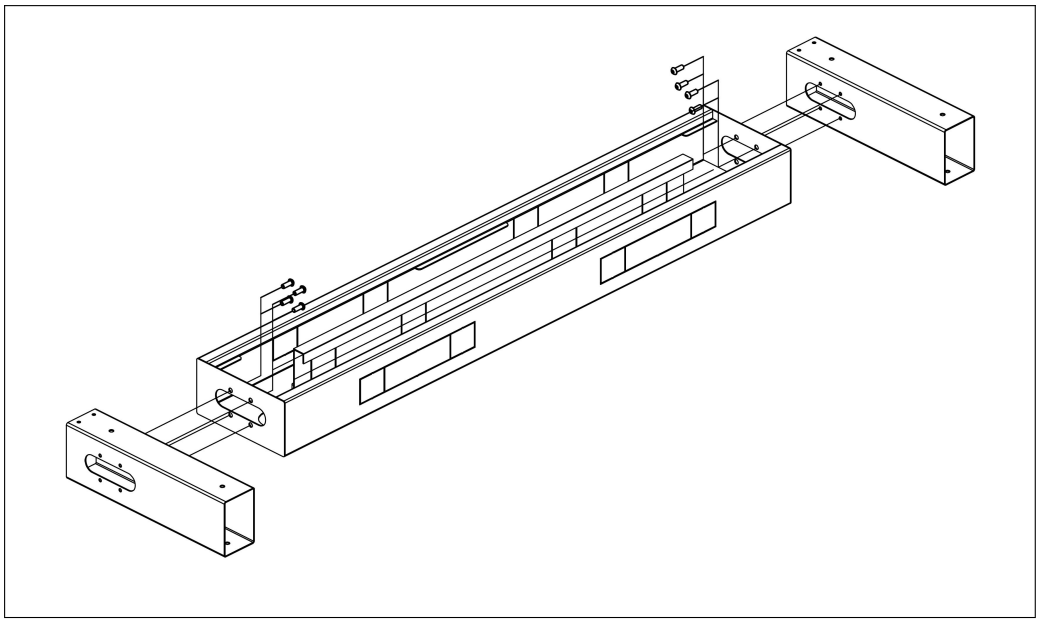

Step 1
- Install the U brackets(U brackets can be found inHP-SSARM carton) to the desk frame with 4 pcs M8x10 screws.
- Mount the cable tray to the desk frame and fix it with 6 pcs M6x10 screws

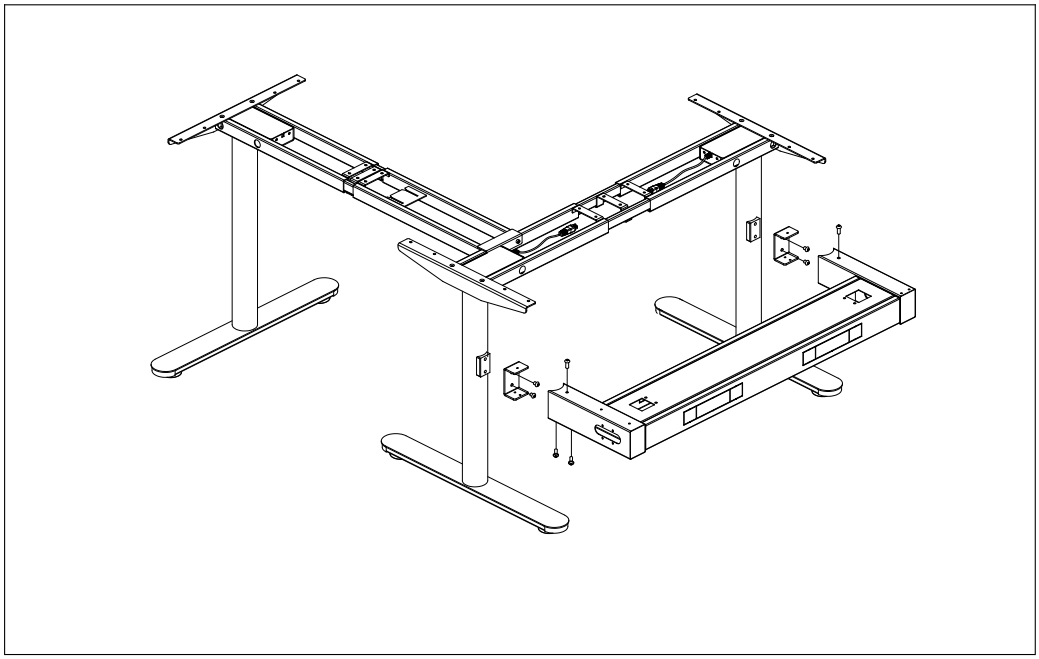

Binowee Group | Level 1, 100 George Street, Redfern NSW 2016 | 02 9188 5180 | sales@binoweegroup.com.au | binoweegroup.com.au
Follow each step in order. Two people are recommended for assembly and lifting. Contact Binowee Group for missing or damaged parts.

Screen panel installation

Step 1

- Insert the tapped plates to the screen panel((plates can be found in B2-SBRAC carton)

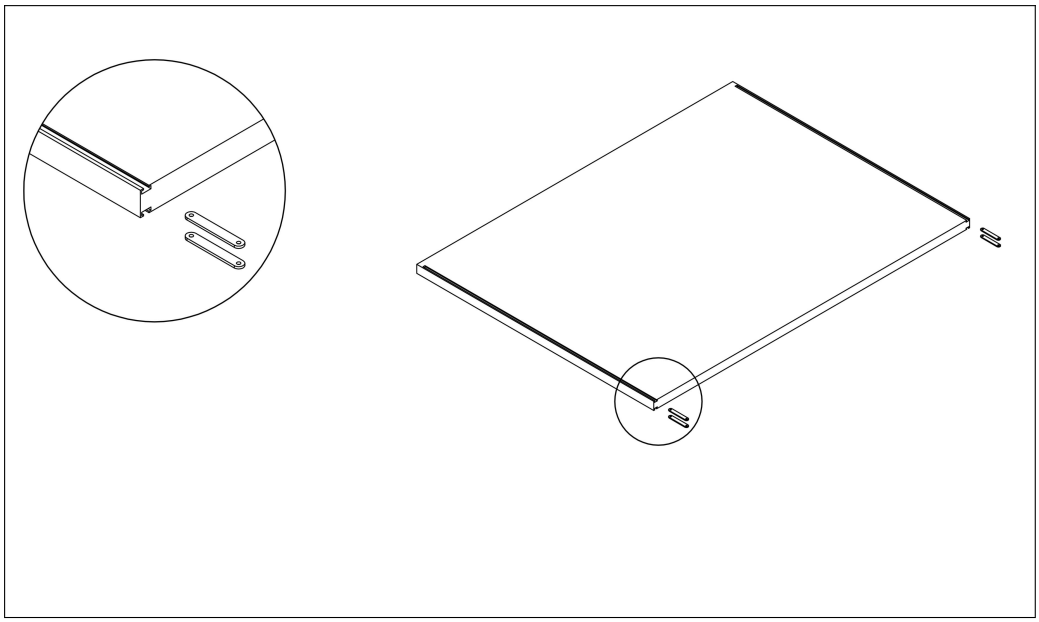

Step 2

- Install the screen brackets(B2-SBRAC) to the panel with 8 pcs M5x6 screws.

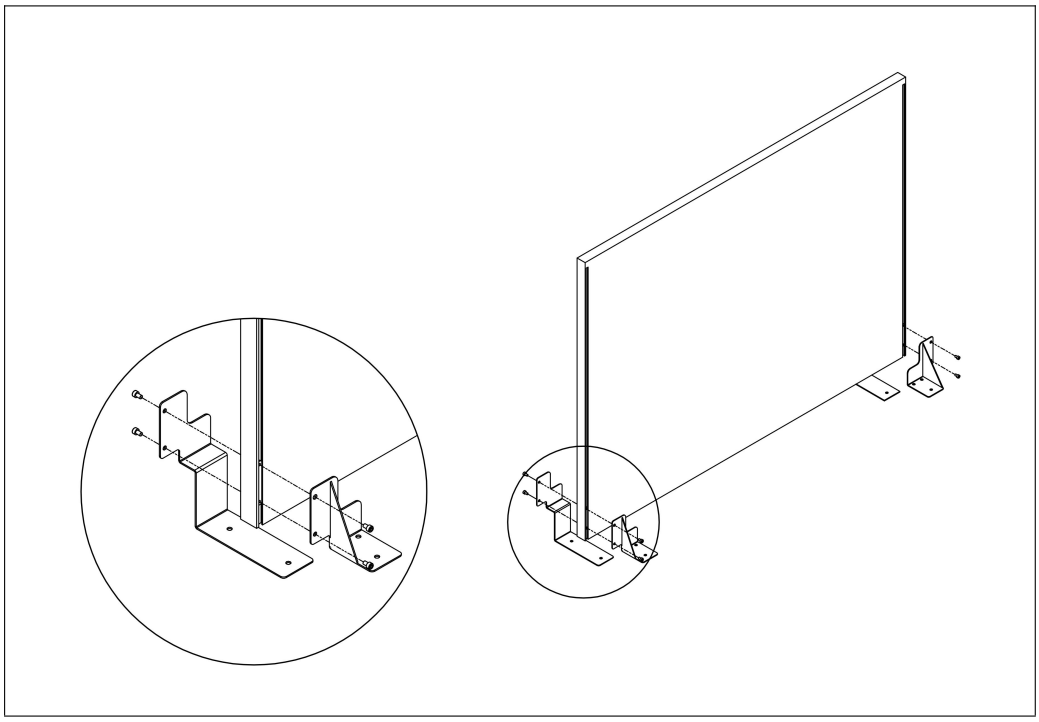

Binowee Group | Level 1, 100 George Street, Redfern NSW 2016 | 02 9188 5180 | sales@binoweegroup.com.au | binoweegroup.com.au
Follow each step in order. Two people are recommended for assembly and lifting. Contact Binowee Group for missing or damaged parts.

Step 3

- Fix the screen brackets((B2-SBRAC)) to the desk frame with 10 pcs M6x10 screws.

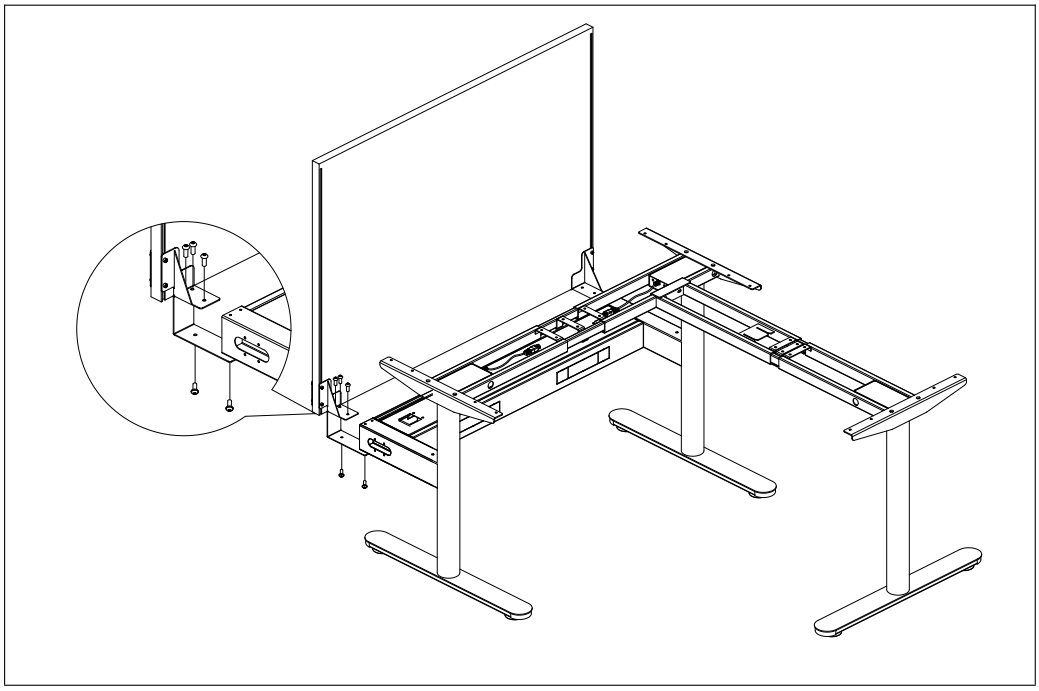

EPS (900mm H Eco Panel) Screen panel installation

Step 1

- Install the screen brackets(B2-SBRAC) with 10 PCS M6x10 Screws
  The brackets direction as photos display.

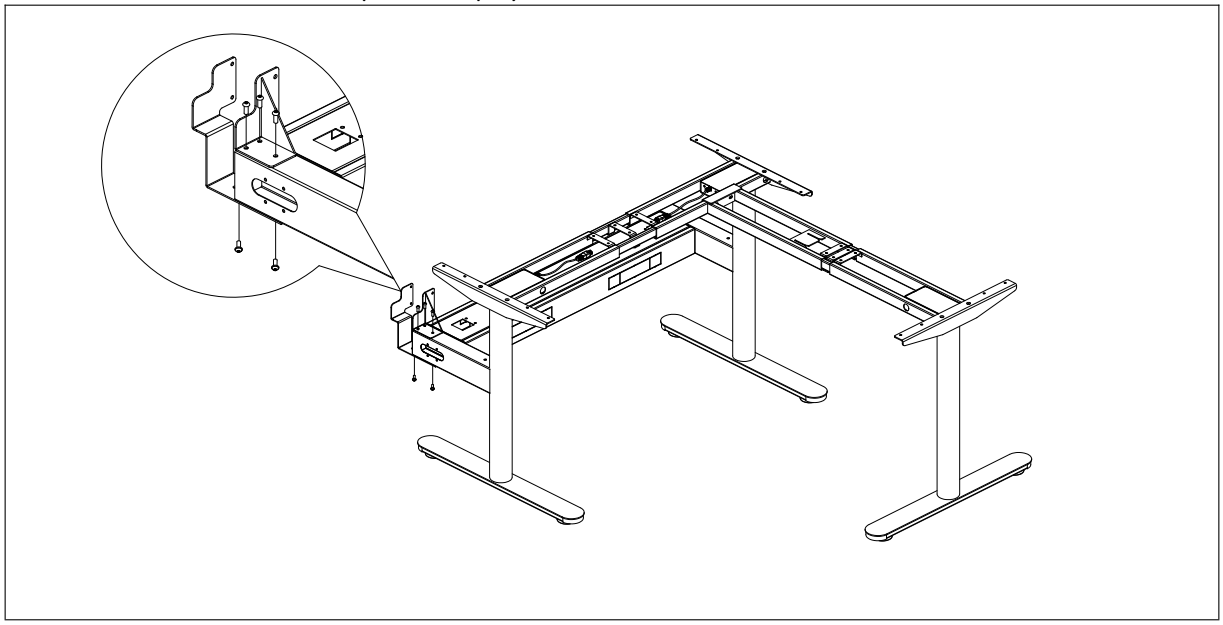

Step 2

- Place the EPS panel on the screen brackets(B2-SBRAC)
- Using a 6mm drill bit (not included), drill out holes in Eco Panel Screen in line with back to back screen bracket holes (Note: Carbide Drill Bits Work Best For PET panel)
- Place 8 x Double Ended Bolts M5* 32mm - 6mm through screen bracket (B2-SBRAC) holes and the holes you have created in the Eco Panel Screen. Tighten double ended bolt with Allen key.

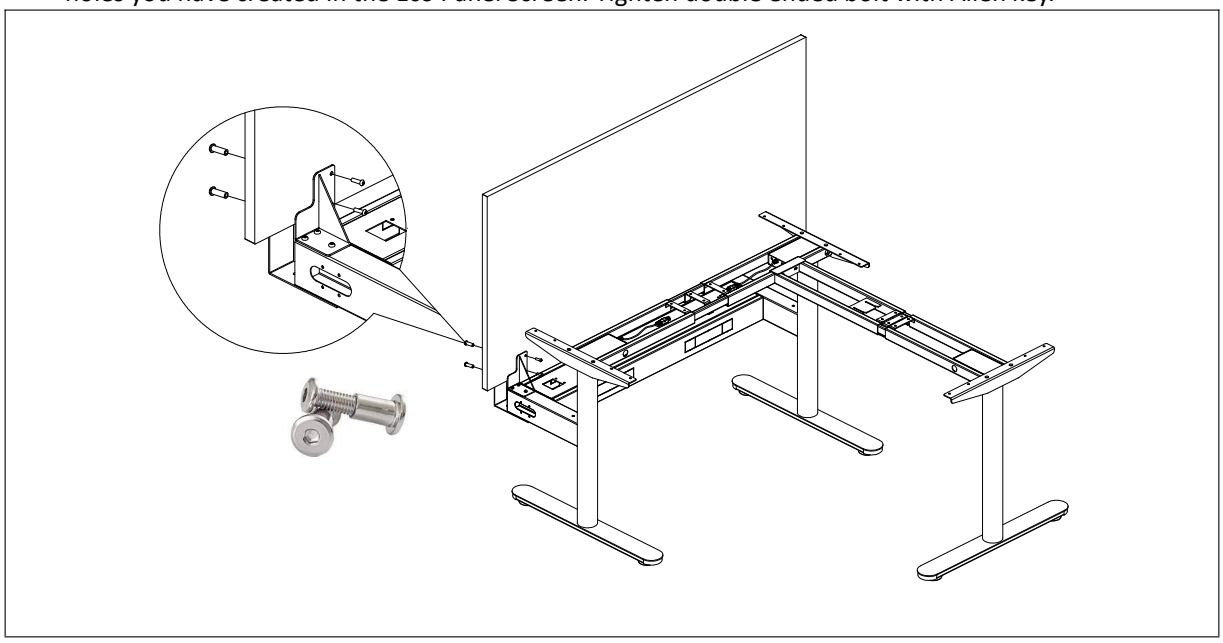

Binowee Group | Level 1, 100 George Street, Redfern NSW 2016 | 02 9188 5180 | sales@binoweegroup.com.au | binoweegroup.com.au
Follow each step in order. Two people are recommended for assembly and lifting. Contact Binowee Group for missing or damaged parts.